Global engineering –
Trusted solutions

OWNER'S MANUAL

BLAST HELMET

APOLLO 600 CE

Supplied air respirator with continuous air flow Cat. III Equipment class 4 B

in acc. with DIN EN 14594:2018

Clemco
International GmbH

Carl-Zeiss-Straße 21
83052 Bruckmühl
Germany

Tel.: +49 (0) 8062 – 90080
E-mail: info@clemco.de
Web: www.clemco-international.com

Revision: 3

TABLE OF CONTENTS

1 SCOPE OF MANUAL 4

2 APPLICATION AND LIMITATIONS 4

2.1 General description 4

2.2 Restrictions and information in acc. with DIN EN 14594:2018 4

2.3 Toxic dust poisoning 6

2.4 Ear protectors 7

2.5 Expiry date of the PPE or certain of its components 7

3 DESCRIPTION OF THE EQUIPMENT 7

4 PREPARATION 7

5 AIR SUPPLY 8

5.1 Air quality 8

5.2 Air volume, pressure and line length 9

6 OPERATION 9

7 SETTINGS 10

7.1 **Control valve** (Art. no. 100074) 10

7.2 Adjusting the helmet suspension 11

8 MAINTENANCE / REPLACING PARTS 12

8.1 Replacing the inner lens 12

8.2 Replacing the outer lens and cover lenses 12

8.3 Replacing the helmet suspension 13

8.4 Cape 13

8.5 Replacing the inner collar (nylon and ASS cape only) 14

8.6 Replacing the lens frame 14

8.7 Replacing the chin strap 14

9 SERVICING / CLEANING 14

9.1 Filter 14

9.2 Nylon cape 14

9.3 Leather cape 14

9.4 Inner collar 14

9.5 Sweatband/helmet suspension 14

9.6 Blast helmet 15

9.7 Inner lens 15

10 STORAGE 15

10.1 Daily storage 15

10.2 Long-term storage 15

11 REPLACEMENT PARTS 16

11.1 Helmet 16

11.2 Air control valve 16

11.3 Individual components 16

11.4 Additional parts 19

1 Scope of manual

This manual covers the startup, operation, maintenance, replacement of parts and measures that ensure the safe operation of the Apollo 600 CE protective helmet.

Read the entire manual before startup or operation of the equipment.

The following additional components may be used in conjunction with the Apollo 600 CE blast helmet:

Article no.	***Description***	***Remarks***
03580 D or 03527 D	CPF-20 or CPF-80 air filter	Installation between air supply and air supply line
23825D	Clem Cool air conditioner	In place of the pressure regulation valve to cool the air
04411I	Climate control	In place of the pressure regulation valve to heat or cool the air as required
These additional components are installed between the air supply and the air supply line.		
25189D	DLX padded suspension kit	Additional component for a better and more comfortable fit
24310D	Leather cape for Apollo 600	In place of the nylon cape (e.g. if a lot of blast media rebounds)
24405D	Rubber cape 4436	In place of the nylon cape (e.g. if a lot of blast media rebounds); lighter than the leather cape
24406D	ASS cape 4436 RA	In place of the nylon cape if using fall protection during blasting, rubber
22892D	CMS-2 carbon monoxide alarm	Carbon monoxide monitor - located outside the helmet
24613D	CMS-3 carbon monoxide alarm	Carbon monoxide monitor - integrated in the helmet

2 Application and Limitations

2.1 General description

The Apollo 600 CE blast helmet was developed especially for use in blasting operations and is approved in accordance with DIN EN 14594:2018 (and MSHA-NIOSH).

2.2 Restrictions and information in acc. with DIN EN 14594:2018

a) The helmet enables the wearer to be supplied with breathable air, which must comply with EN 12021. The air is fed at a continuous flow rate to a mask via a breathing line. The equipment has an adjustable air flow valve that is worn by the operator. An air supply line links the equipment wearer with the air supply.

b) Excess and exhaled air is released to the ambient atmosphere. The following temperatures are prescribed for:

Storage: 0°C to +30°C

Operation: -6°C to +40°C

Transport and handling: -20°C to +50°C

c) The length of the line between the filter and the control valve on the helmet must not exceed 40 m. We sell the line in pre-cut lengths of 5, 10, 20 and 40 m. A maximum of three lines can be connected.

d) The supplied air must have a pressure between 5 and 8 bar. This pressure can be ensured by using our CPF 20 air filter with integrated pressure regulator.

e) The pressure in the air supply line must not exceed 8 bar.

f) To ensure that the operator is supplied with sufficient oxygen, the air flow should be between 130 l/min and 190 l/min. The air indicator will be activated by the minimum amount, i.e. the flag will be retracted.

g) *Warning:* The helmet is intended for use in an atmosphere that does not represent an imminent danger to human life or health and contains at least 19.5 % by volume oxygen. The operator should be able to escape from this atmosphere without needing to use the helmet.

The Apollo 600CE helmet will not provide adequate protection in certain highly toxic atmospheres caused by e.g. lead-contaminated dust from removing lead-based paints or other paints, asbestos, heavy metals etc.

Lead poisoning may cause death. The maximum workplace concentration has been defined as 0.1 mg/m³ of air (TRGS 900). For this reason, the blasting contractor must always determine which type of paint is to be removed and, if necessary, ensure that operators wear a blast hood or helmet that is approved for use with these substances or an additional respirator. In accordance with DGUV Regulation 112-190, Class 4B blast protection equipment can be used at up to 500 times the threshold value.

h) *Warning:* During a period of very high use, peak respiration may produce negative pressure in the helmet.

i) *Warning:* The air supply must comply with EN 12021.

j) *Warning:* The moisture content in the breathing air must be kept within the limits specified in EN 12021 to prevent the supplied air respirator with continuous air flow from freezing. If the equipment is used at a temperature below 4°C, the moisture content must be limited to prevent freezing.

k) *Warning:* The equipment must not be operated with pure oxygen or oxygen-enriched air.

l) *Warning:* Each operator connected to the air supply system must check that the capacity of the system is adequate as described in the information provided by Clemco.

m) It is imperative that operators follow the instructions for donning the equipment as provided by Clemco. These are contained in Sections 4 (Preparation) and 6 (Operation) of this owner's manual.

n) The air supply line is not resistant to contact with hot surfaces or boiling water and is therefore not labelled accordingly.

o) The air supply line is not antistatic and is therefore not labelled accordingly.

p) Do not use aggressive chemicals or solvents to clean the equipment. This may irritate or harm the operator and alter the properties of the material used. Please also consult the instructions concerning cleaning products and disinfectants in Section 9 of this owner’s manual.

q) Not applicable

r) *Warning:* Particular attention must be paid to ensuring that the equipment is not accidentally connected to other gas supplies, e.g. oxygen, acetylene or nitrogen. Never connect the breathing air line to an air source that has not been tested for gas or particulate contamination.

s) The operator must assess the risk of potentially dangerous substances (e.g. nitrogen) at the workplace.

t) The blast helmet is labelled in the customary manner. This label is clearly visible and durable.

Explanation of the respirator label (Section 7, EN 14594:2018):

Line 1: Type designation ➔ Apollo 600
Line 2: Serial number of the blast helmet ➔ currently a five-digit number
Line 3: Number and year of the European standard and equipment class ➔ EN 14594 : 2018 4B
Line 4: left - Storage temperatures to which the respirator is resistant – symbol acc. to EN132➔ 0°C to +30°C
Line 4: middle – Month and year of manufacture (MM-YYYY) ➔ (example: 04 – 2019)
Line 4: right – Symbol: "See information provided by manufacturer" ➔ open book with "i"
Line 5: Name of manufacturer ➔Clemco International GmbH
Line 6: Address of manufacturer ➔Clemco International GmbH, Carl-Zeiss Str. 21, 83052 Bruckmühl
Line 7: Country of manufacture ➔ Made in Germany
Line 8: CE symbol and number of the notified monitoring body ➔CE symbol and number of the notified monitoring body

u) The cape and cape fastener are also labelled. The blast helmet is not suitable for use for other operations such as welding or painting.

-The helmet is not suitable for use in flammable atmospheres.

-The helmet can be worn with the head in the usual vertical or slightly inclined position.

-The air indicator will not function in forced postures, e.g. with the head in a horizontal position when lying down.

-The helmet also protects the skin on the operator's head and neck from grazing caused by re-bounding blast media.

-The quality of the air supply is critical and very important for ensuring the safety and wellbeing of the operator.

Do not use a piston compressor (oil bath) to generate the breathing air as there is a great risk it may produce high carbon monoxide concentrations.

The presence of excessive carbon monoxide concentrations may result in the operator's death.

-If special air sources are used, e.g. a cylinder trolley or portable air tanks, these must be equipped with warning devices in accordance with EN14594:2018.

v) A maximum of four operators can be connected simultaneously to the CPF filter.

2.3 Toxic dust poisoning

The following applies for model 1 and model 2 protective clothing in accordance with DIN EN ISO 14877:2003 (D):

Research has identified the potential risks of lead poisoning to unprotected operators and other personnel who may be exposed to lead-containing abrasive dust in the vicinity of abrasive blasting operations. This dust is primarily the result of removing lead-containing paints. A risk to human life and health may also result from paints containing heavy metals, asbestos or other toxic dust.

For this reason, the blasting contractor must always determine which type of paint is to be removed and, if necessary, ensure that operators wear a blast hood or helmet that is approved for use with these substances or an additional respirator.

Lead poisoning may cause death. The maximum workplace concentration has been defined as 0.1 mg/m³ of air (TRGS 900).

In accordance with DGUV Regulation 112-190, Class 4B blast protection equipment can be used at up to 500 times the threshold value.

2.4 Ear protectors

Ear protectors must be worn when using the blast helmet.

2.5 Expiry date of the PPE or certain of its components

The equipment must be properly serviced, maintained and stored. All rubber components must be replaced at the latest 5 years after the date of manufacture. It is recommended that the blast helmet is replaced after a maximum of 10 years.

3 Description of the Equipment

The minimal version of the blast helmet consists of the following components:

- *Helmet with chin strap, suspension and cape*
- *Breathing air line (length approx. 1,000 mm)*
- *Air supply line (length 5 m) with quick coupling (female)*
- *Air control valve with belt*
- *Hood*

4 Preparation

Check and/or prepare the following components:

(1) Adjust the helmet suspension.	– Fit the helmet suspension to the operator's head using the adjusting screw and adjust the chin strap to the correct length (see also 7.2).
(2) Check that the lens system is in place.	– Inner lens (replacement, see 8.1) – Outer lens (replacement, see 8.2) – Perforated cover lenses (replacement, see 8.2) **The blast helmet should never be used without the inner lens, outer lens and cover lenses in place.**
(3) Air supply line	– Attach the air supply line to the air control valve using the quick coupling. – Attach the other end of the line to the air filter, either CPF-20 or CPF-80 (more than one operator). **Never carry the blast helmet by the air line but always use the han-**

	dle to avoid damage to the air line.

5 Air Supply

The air supply to the blast helmet is a critical element of operator safety and is not included in the scope of delivery. Please read this section with particular care. Poor air quality may result in illness or death of the operator (see 2.2).

5.1 Air quality

The air supply must comply with EN 12021.

A supply pressure of 6 - 8 bar must be ensured. This can be achieved using our CPF 20 air filter with integrated pressure regulator (Art. no. 03580D) so that the right air flow is available (see also 5.2).

The quality of the air supply is critical and very important for ensuring the safety and wellbeing of the operator. Particular attention must be paid to ensuring that the apparatus is not accidentally connected to other gas supplies, e.g. oxygen, acetylene or nitrogen.

Never connect the breathing air line to an air source that has not been tested for gas or particulate contamination.

Do not use a piston compressor (oil bath) to generate the breathing air as there is a strong risk it may produce high carbon monoxide concentrations.

The presence of excessive carbon monoxide concentrations may result in the operator's death.

The breathing air must meet the following requirements:

-The air supply must comply with **EN 12021**.

-Before using the helmet, please read the owner's manual, all instructions and labels, and all warnings concerning the **compressed air source**. Please observe the compressor manufacturer's statements/warnings concerning the use of the compressor.

Warning:

During intense use, respiration may produce negative pressure in the helmet.

-During intense use therefore, the air control valve needs to be opened wider to prevent the ingress of dust into the helmet.

-If using an oil-lubricated compressor for the air supply, a high temperature monitor and/or a carbon monoxide alarm should be fitted. If only a high temperature monitor is fitted, the air must be regularly tested for the presence of carbon monoxide. The user is responsible for testing the breathing air, the compressor, the carbon monoxide alarm, the air filter and the wearing parts. An overheated or poorly maintained compressor may produce carbon monoxide or an unpleasant smell. It is also possible to use systems to remove or convert carbon monoxide in order to ensure good breathing air quality.

-When using a compressor, the air intake must be positioned to prevent the intake of contaminants, e.g. carbon monoxide and oil components found in exhaust gases. This applies especially when using portable compressors. For this reason, no vehicles or motor-powered equipment should be operated in the vicinity of the compressor.

An appropriate filter (e.g. CPF 20, Art. no. 03580 D) must be fitted and regularly serviced to remove unpleasant smells, oil mist, condensation, rust from pipes and other constituents.

-We recommend the use of our CMS-2 or CMS-3 carbon monoxide alarm.

-The compressed air used must be free from oil and water.

5.2 Air volume, pressure and line length

To ensure that the operator is supplied with sufficient oxygen, the air supply should be between **130l/min and 190l/min.**

The air indicator will be activated by the minimum amount, i.e. the flag will be raised if the amount is higher and lowered if it is lower.

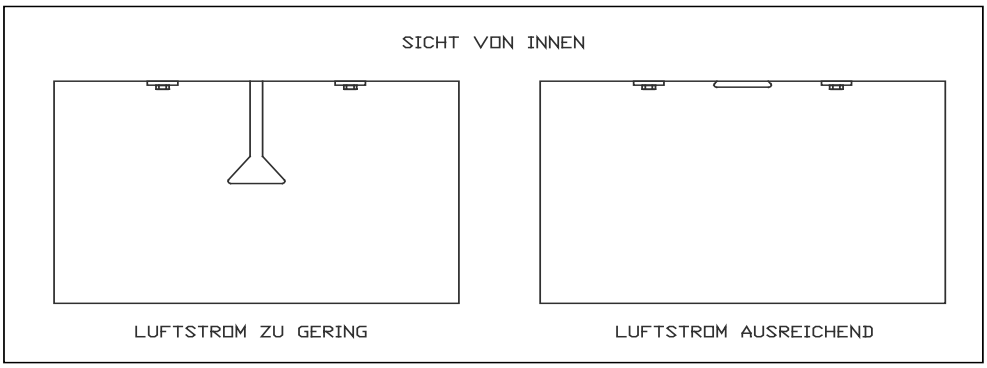

Only CE-approved supply lines with safety couplings should be used to connect the air filter and the regulating valve (see Section 11: Replacement Parts).

The **length of the line** between the filter and the control valve on the helmet must not exceed **40 m**. If it is necessary to use a longer line, please contact the manufacturer to define suitable measures.

The pressure in the supply line must not exceed **8bar**.

6 Operation

Prior to operation, the helmet, breathing air line, air supply line, air intake and all connections must be thoroughly inspected and cleaned of all dust and debris. The helmet suspension should also be inspected and adjusted if necessary (see 7.2 - Adjustments)**.**

The following steps must be taken before operating the helmet:

(1) Air supply	* Start the compressor. * Open the service valve to pressurise the air supply line.
(2) Check the air pressure.	Make adjustments at the air filter.
(3) Check the equipment.	* Protective equipment * Helmet * Breathing air supply
(4) Check for leaks and fit.	* Supply lines * Connections
(5) Put on the equipment.	* Put on the hood. * Put the helmet on, ensuring as far as possible that no blast media gets

	inside it. * Correctly position the chin strap and inner collar. * Pull the cape down and fix below the arms using the two rubber straps on each side. * Put on the belt with the air control valve and tighten it well.

7 Settings

*7.1 **Control valve** (Art. no. 100074)*

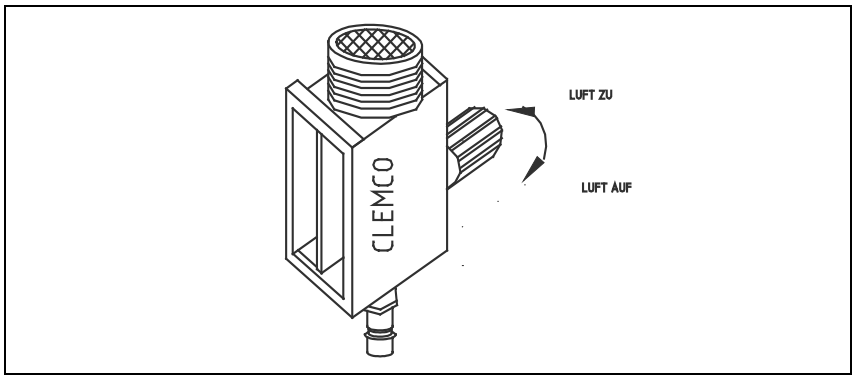

Figure 1: Air control valve

The Clemco air control valve allows the operator to increase or decrease the air flow by turning the knob at the side while wearing the helmet. When the air supply is properly connected, the valve allows the breathing air to be regulated between **130** l/min and **400** l/min.

7.2 Adjusting the helmet suspension

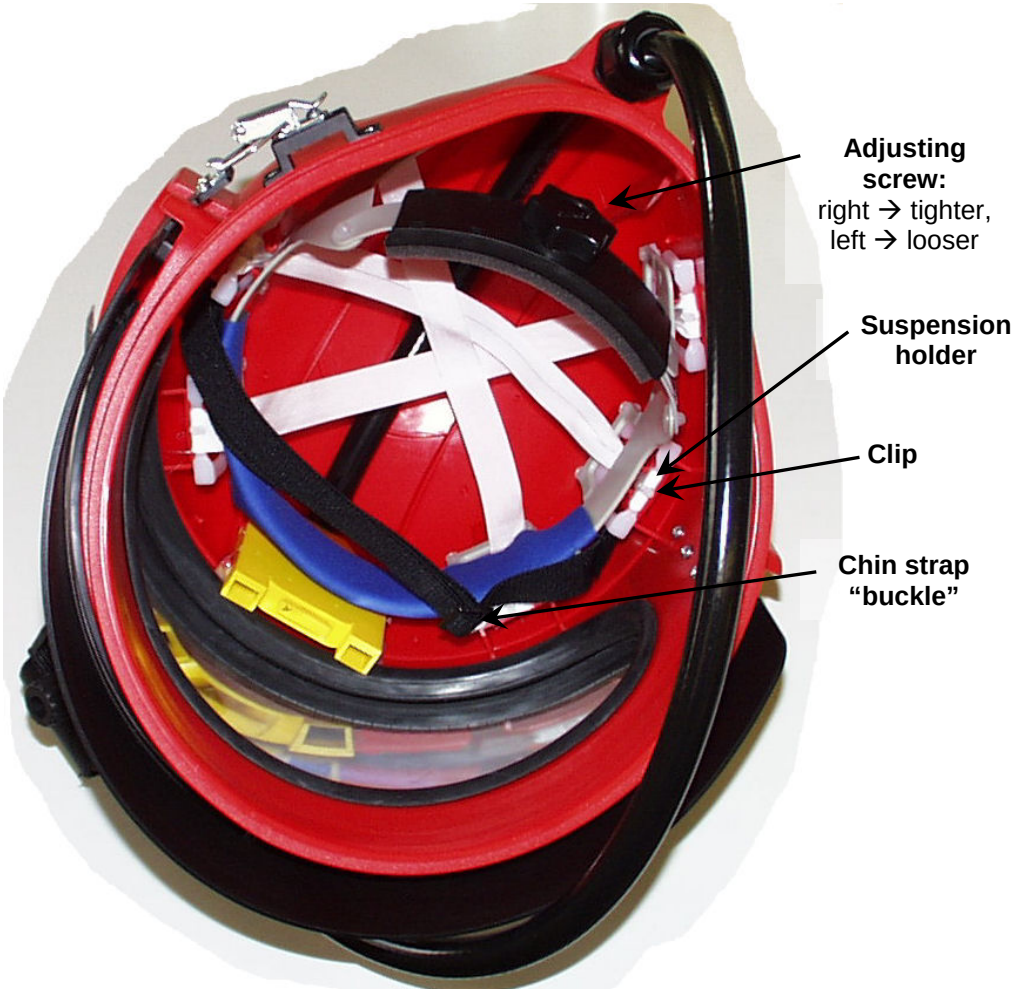

Figure 2: Helmet suspension

The following steps must be taken to adjust the helmet suspension:

(1) Remove the cape.	* Open the buckle on the cape belt by pressing the small lever and pulling the belt out. * Remove the cape from the helmet.
(2) Adjust the helmet suspension.	Use the adjusting screw to adjust the helmet suspension to the operator's head size. Turn the screw clockwise → to make the helmet suspension tighter; turn the screw counter-clockwise → to make the helmet suspension looser.
(3) Adjust the chin strap.	Slide the "buckle" on the chin strap to adjust it to the operator's head size.
(4) Reattach the cape.	See 8.4.

The helmet suspension ensures a sufficient distance between the head and helmet. It must be properly installed and adjusted to provide the protection and comfort that the helmet is designed to achieve.

8 Maintenance / Replacing Parts

* The helmet, all lines, the air inlet and all connections should be inspected for the presence of dust and debris and cleaned before use. All parts should be inspected for wear and tear.
* Regularly inspect and clean the foam filter and screen filter in the air control valve and air inlet in the helmet.
* After use, the helmet should be hung by the handle in a clean place.

8.1 Replacing the inner lens

(1) Open the lens frame.	Open the lens frame latch and remove frame.
(2) Remove the inner lens.	* From the outside, use one hand to pull up the lens gasket in upper area. * Use the other hand to push the lens out from the inside. * Check the fit of the gasket.
(3) Fit new inner lens.	* Clean the gasket and moisten the groove for the lens with mild soapy water. * Place the new lens in the centre of the gasket and push it into the groove of the gasket with the installation tool. Avoid scratching the lens (see Figure 3).
(4) Close the lens frame again.	Hook the frame back in the latch and close.

8.2 Replacing the outer lens and cover lenses

Up to five perforated cover lenses can be fitted simultaneously. However, to ensure maximum visibility, we recommend using only the number of cover lenses necessary for the specific work operation.
Follow the instructions below to ensure that the cover lenses can be easily removed by an operator wearing heavy work gloves.

(1) Open the lens frame.	Open the lens frame latch and remove frame.
(2) Remove the outer lens.	Carefully remove the outer lens from the mushroom-shaped studs.
(3) Remove the used cover lenses.	Carefully remove the cover lenses or remnants of the cover lenses from the mushroom-shaped studs.
(4) Fit the new cover lenses.	Position the tabs on the hinge side. Pull all except the last tab through to the front of the frame and press the cover lenses onto the mushroom-shaped studs on the inside of the frame.
(5) Fit the new outer lens.	When fitting the new outer lens, ensure that there is no dust or dirt between the lenses.

	Press the outer lens onto the mushroom-shaped studs.
(6) Close the lens frame again.	Hook the frame back in the latch and close.

Figure 3: Replacing the inner lens using the installation tool

8.3 Replacing the helmet suspension

Carefully remove the helmet suspension from the holder (see also Figure 2).
The clips hold the helmet suspension in place. The angled tab must point toward the inside of the helmet.
When fitting the new helmet suspension, ensure that the chin strap is at the front.

8.4 Cape

Follow this procedure if the cape is soiled or needs to be replaced.

(1) Remove the cape.	* Open the buckle on the cape belt by pressing the small lever and pulling the belt out. * Remove the cape from the helmet.
(2) Attach the new cape.	* Put the spring that is sewn into the cape into the slot in the helmet (the cape seam must face backwards). * Slide the cape evenly into the slot until all of the spring is in the slot. * Position the belt so that the buckle is opposite the lens frame latch and the end is facing backwards. * Pull the belt through, check its position and tighten the ratchet.

8.5 Replacing the inner collar (nylon and ASS cape only)

The inner collar is important in ensuring the air circulation inside the helmet and preventing the ingress of dust. Detach the collar from the cape using the zipper to replace or wash (see also 9.2 for washing instructions).
The inner collar must be replaced if it no longer fits snugly round the neck.

8.6 Replacing the lens frame

The lens frame must be replaced if the seal is no longer guaranteed. The sound insulation inside the helmet should also be replaced when replacing the lens frame.

8.7 Replacing the chin strap

Replace the chin strip when it becomes worn.
Push the chin strap upwards until it snaps out and then remove it from the holder. When fitting the new chin strap, ensure that the bevelled edges of the holes are facing inwards.

9 Servicing / Cleaning

Do not use aggressive chemicals or solvents to clean the equipment. These may irritate or harm the operator and alter the properties of the material used.

9.1 Filter

The filter (foam) is inside the control valve. It must be removed if it is soiled. Use a small screwdriver to prise off the snap ring and remove the screen filter and the soiled foam filter. Reassemble the components in reverse order.

9.2 Nylon cape

The cape can be machine-washed in warm water using a mild detergent. It can be dried in a tumble dryer at the lowest temperature setting. Do not dry clean. See 8.4 for how to detach the cape.

9.3 Leather cape

The cape can be brushed or cleaned with a damp sponge. (Do not wash, dry clean, iron or use chlorine bleach.)

9.4 Inner collar

For reasons of hygiene, the inner collar should be washed daily to remove sweat and dust.
Detach the collar from the cape (zipper) and wash in warm water and a mild detergent. The collar can be dried in a tumble dryer at the lowest temperature setting. Do not dry clean the collar. See 8.5 for how to detach the collar.

9.5 Sweatband/helmet suspension

The sweatband, helmet suspension and chin strap can be washed in warm water and a mild detergent. See 8.3 for how to detach the helmet suspension.

9.6 Blast helmet

The helmet should be cleaned with a disinfectant. A suitable product is Indicur from Henkel.
Attention! This product has only been tested for its compatibility with our helmet. Please follow the manufacturer's instructions for use. We assume no liability for any skin reactions or other health problems associated with the use of the disinfectant.

9.7 Inner lens

The inner lens should be cleaned or replaced if it becomes soiled or scratched. It can be cleaned with warm water and a mild detergent. Solvents such as alcohol, white spirit or ammonia must not be used. Allow the lens to air-dry. The use of cloths or similar may scratch the lens.

10 Storage

10.1 Daily storage

During breaks or at the end of work, the helmet should be hung by the handle in a clean place.

10.2 Long-term storage

After cleaning and drying the helmet, tuck the cape inside (nylon, rubber and ASS cape only). Pack the helmet in a sealed bag or film to protect it from dirt and moisture.

11 Replacement Parts

11.1 Helmet

Item	Art. no.	Model	Description
-	24243D	APOLLO 600 CE	A 600 CE blast helmet + control valve + nylon cape
-	24315D	APOLLO 600 CE	A 600 CE blast helmet + control valve + leather cape
-	24313D	APOLLO 600 CE	A 600 CE blast helmet + 5 m line
-	24244D	APOLLO 600 CE	Replacement part for A 600 blast helmet without accessories

11.2 Air control valve

Item	Art. no.	Description
-	04381 I	Filter set (foam filter, screen filter, snap ring)
-	100042	Control valve, complete
55	100074	Control valve, without belt

11.3 Individual components

Item	Art. no.	Description
1	23800 A	A 600 outer helmet shell
2C	04491 I	Acoustic foam, right
2D	04492 I	Acoustic foam, left
2H	23815 D	Nylon cape for A 600
-	24310 D	Leather cape for A 600
2H1	08740I	Inner collar for A60 and A600
2I	04460 I	Chin strip
2J	23806 I	A 600 helmet suspension
2J1	23821 I	Clip for A 600 helmet suspension (4 pieces/helmet suspension required)
2L	23801 D	A 600 cape belt, complete
Item	**Art. no.**	**Description**
2L3	23803 D	A 600 latch
2L4	24245 D	M6x8 screw for latch
2M	23819 D	A 600 visor gasket
2N	24308 D	Apollo 600 inner lens (1 mm polycarbonate, 5 pieces)
2O	04361 I	Cover lenses 0.2 mm (25 pieces)
2P	24012 D	A 600 visor frame, complete
2P1	23810 D	A 600 visor frame, black
2P2	23812 D	A 600 hinge, black
2P3	99269 D	Rivet (base)
2P4	04454 D	Rivet (head)

2P5	08738 I	Hook for visor
2Q	23805 I	Screw for A 600 (6/32 x ½”)
2R	08924 I	Nut #6 (3/8”)
2W	04373 I	Outer lens 0.5mm (25 pieces)
2Z	90266 D	Holder for chin strap
2AA	23805 I	Screw (6/32 x ½”)
2AB	23817 I	Tooth lock washer for chin strap
2Y	24316 D	A 600 latch base, complete
2YA	23813 D	A 600 latch base
2YB	04449 I	Visor holder
2YC	04438 I	Screw for Apollo (6/32 x 3/8”)
2YD	08924 I	Nut #6
50	100913	A 600 CE flow indicator, complete with line
50	100915	A 600 air indicator
51	100914	Air line black 1 m
52	100917	A 600 screw fitting
53	24263 D	Clip for 9 mm air line
54	01030 D	Screw fitting for line
55	100042	Control valve, with belt
56	100421	5 m CE air line, complete
	100406	10m CE air line, complete
	100404	20m CE air line, complete
	100405	40m CE air line, complete
	100403	9mm safety coupling (CE-approved)
	100380	Ear plugs
	10533 D	Owner’s manual
	100586	Hood (polypropylene)
	24395D	Installation tool for inner lens

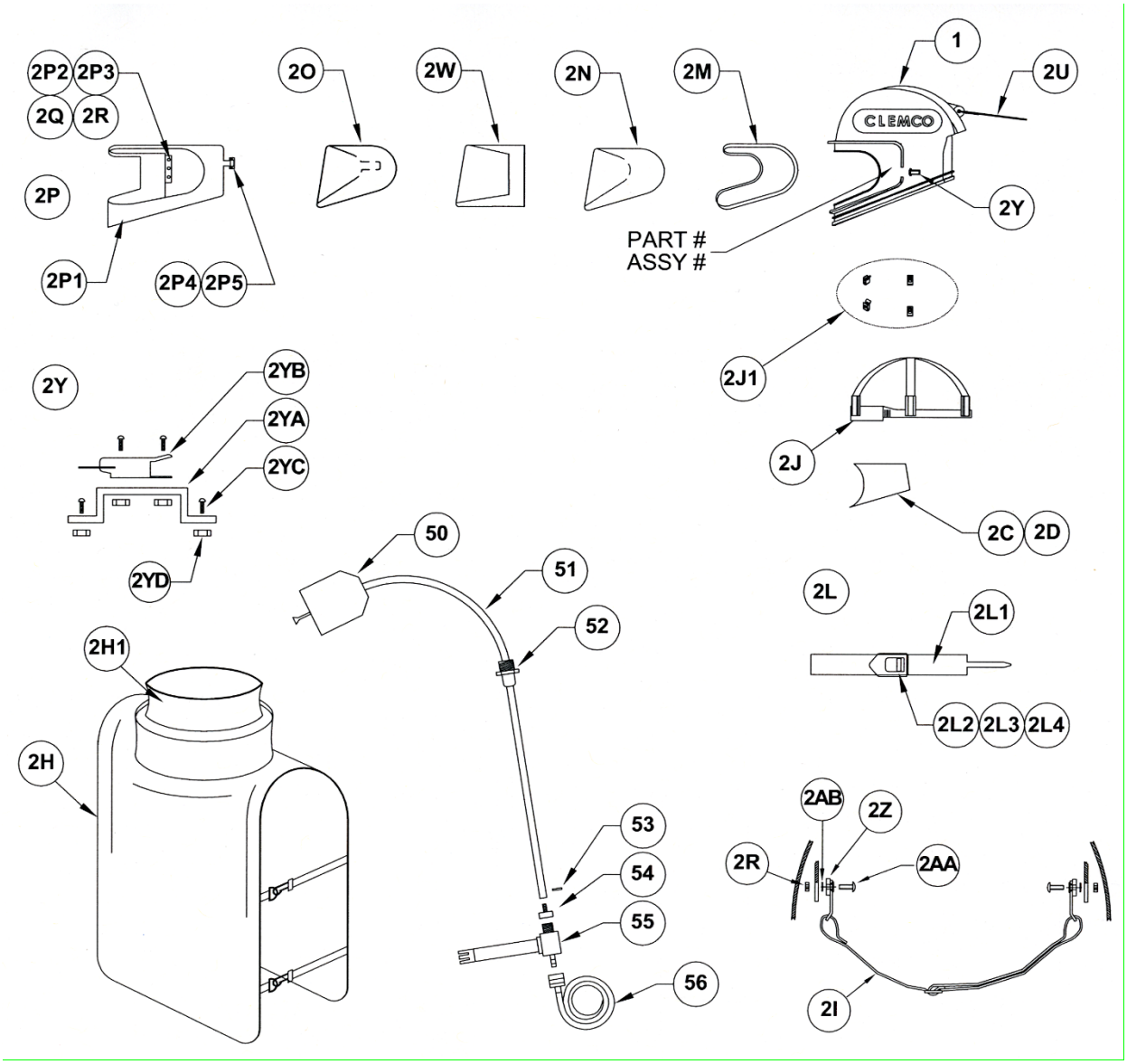

Figure 4: Individual components of Apollo 600

	
Nylon cape for A 600 – Art. no.: 23815D	Leather cape for A 600 – Art. no.: 24310D

Figure 5: Ce-certified cape for Apollo 600

11.4 Additional parts

Clem Cool air conditioner	23825D
Climate control	04411I
DLX padded suspension kit	25189D