Global engineering –
Trusted solutions

OWNER`S MANUAL

RESPIRATOR MODEL

APOLLO 100

CLEMCO SUPPLIED AIR RESPIRATOR

Clemco
International GmbH

Carl-Zeiss-Straße 21
83052 Bruckmühl
Germany

Tel.: +49 (0) 8062 – 90080
Mail: info@clemco.de
Web: www.clemco-international.com

Revision: 02.2015

TABLE OF CONTENTS

1. Scope of manual *3*
2. Applications and limitations *3*
2.1. General description 3
2.2 Toxic dust poisoning 4
2.3 Ear protection 4
3. Description *4*
4. Preparation *5*
5. Air supply *5*
5.1 Air quality 6
5.2 Air - volume velocity, pressure and hose length 7
6. Operation *7*
7. Adjustments *8*
7.1 Control valve 8
7.2 Adjustment and replacement of the helmet suspension 9
8. Maintenance program and replacement parts 10
8.1 Replacing inner lenses 10
8.2 Replacing perforated cover lenses 11
8.3 Suspension 12
8.4 Outer cape 12
8.5 Replacement of collar 13
8.6 Replacement of lens frame 13
8.7 Replacement of chin strap 13
8.8 Replacement of air hose 13
9. Service maintenance and cleaning *13*
9.1. Filter 13
9.2. Outer cape 13
9.3 Collar 14
9.4 Sweatband / Suspension 14
9.5 Helmet assembly 14
9.6 Inner lens 14
10 Storage *14*
10.1 Daily storage 14
10.2 Long duration storage 14
11. Spare parts *15*
11.1 Air Control Valve 15
11.2 Helmet 15

1. Scope of manual

This manual covers setup, operation, maintenance, replacement parts, and important warnings for safe operation of the Clemco Apollo 100 Supplied-Air respirator.
Read the entire manual before installing or operating the equipment.

The following additional equipments may be used in conjunction with the Apollo respirator:

Description	***Part – no.***
Air conditioner	04410
Climate control	04411
Air Filter CPF - 20 or CPF - 80	03580 respective 03527
Carbon Monoxide Alarm	03590

These additional equipments have to be installed between the pressure air-supply and the pressure air supply hose.

2. Applications and limitations

2.1. General description

The Apollo 100 was specially developed and approved for blasting. (MSHA - NIOSH)
The following cautions and limitations have to be followed:
-Clemco recommends the compliance of the air quality with EN12021.
- The Apollo 100 is **not suitable for any other work like e.g. welding or painting.**
- Only for the use in atmospheres which do not represent any imminent danger for life and health and which contains a minimum oxygen volume of 19,5%.
- Not for the use in flammable atmospheres.
- It is not allowed to use this product with pure oxygen or with oxygen enriched air.

- The Apollo 100 protects the wearer´s head and neck from impact and abrasion caused by rebounding abrasive.
- The helmet can be used at temperatures between -6° - 40° C.
- If the product is used under a temperature of 4° C the water content has to be reduced to avoid freezing of the product.
- The supplied air must have a pressure between 3 and 8 bar. To assure this pressure you can use our Air filter CPF 20 which has an integrated pressure regulator (Part No: 03580 D) .
- In the moment of highest breathing air requirement during the highest work rate, a negative pressure in the helmet can appear

2.2 Toxic dust poisoning

For operator safety clothing type1 and type 2, according to EN ISO 14877: 2002 (D) the following applies:

Recent research by the Occupational Safety and Health Administration (OSHA) has discovered potential risks of lead poisoning to unprotected abrasive blasting operators and other personnel who may be exposed to lead-containing dust in the abrasive blasting vicinity.

This lead poisoned dust is primarily a result of removing lead containing paint.

Danger for life and health can also be caused by colours which contain heavy metal, asbestos or other toxic material dust. Lead poisoning can cause death. The maximum ground level concentration is declared by TRGS 900 to 0,1 mg/m3.

For that reason it is very important that the Blasting Contractor determines which kind of paint he has to remove. If necessary he has to use then a helmet or an additional Air Respirator which is admitted for the use with one of those materials.

2.3 Ear protection

The noise generated from the helmet itself does not exceed the limit of 80 dB. If noise, caused from outside rises the noise level up to 80 dB always use properly fitted ear plugs when using this equipment.

From experience the use of supplementary earmuffs will be necessary when the blast pressure is > 8 bar and using nozzles with an inner diameter > 8 mm.

3. Description

The main components for the minimal version from a respirator are as follows:

- Helmet with cape attachment strap, suspension and adapted cape
- Breathing air-hose (length = ca. 700mm)
- Breathing air-supply hose (length = 10M) with quick-fitting pipe union (female)
- Air control valve
- Air conditioner
- Climate control

4. Preparation

Please control respective prepare the following components:

(1) Adjust helmet suspension	- Remove the cape (see 8.4) - Detach and adjust the suspension from the helmet (see 7.2)
(2) Check that the lens system is in place	- Inner lens (replacement see 8.1) - Outer lens (replacement see 8.2) - 3 perforated cover lens (replacement see 8.2) **The respirator assembly must never be used without the fixed inner lens, outer lens and the cover lens!**
(3) Belt	Attach the belt to the air control valve.
(*4) Breathing hose*	- Thread the coupling of the breathing tube assembly onto the air inlet fitting, at the back of the helmet. - The other side onto the air control valve. **Use molded-in handle to carry the respirator. Never hold, carry or hang the respirator by the breathing hose!** **Mishandling the respirator in this manner may damage the hose!**
(5) Air supply hose	- Use the quick fitting pipe union to attach the air supply hose to the air control valve. - The other end of the air supply hose attach to the air filter CPF - 20 respective CPF - 80 (more than one blaster)

5. Air supply

Air supply to this respirator system is a critical component for the safety of the user and is not included in this delivery. Read this section carefully. Poor quality air will cause serious respiratory injury or death to the user. (see 2.2)

5.1 Air quality

The quality of air supplied to the respirator is extremely critical to the safety of the user. Special care must also be taken to avoid accidental connection to any other gas lines, such as, oxygen, acetylene, or nitrogen.

Never connect a breathing air line to an air source that has not been tested for gas and particulate contamination.
Do not piston type, oil bath, compressors for breathing air. These compressors may produce dangerous levels of carbon monoxide.
The presence of unacceptable levels of carbon monoxide (CO) or other gases in the breathing air can cause death to the user.
Breathing air must be only used in following conditions:

- Breathing air used to supply the respirator must be respirable breathing air and is not allowed to contain less than 19,5 volume percent of oxygen.

- Prior to using the respirator, read the owner´s manual and all instructions, labels, and warnings related to the **compressed air source**. Take special care about all the statements and warnings from the compressor producer.

- If an oil-lubricated compressor is used, it must be equipped with a high-temperature alarm or carbon monoxide (CO) alarm, or both. If only a high temperature alarm is used, that air from the compressor must be tested frequently for the presence of carbon monoxide.
The user is responsible for the inspection of the breathing air, the compressor, the alarm system for carbon monoxide, the Air filter and wear of the instruments. A compressor which is to hot or wasn´t maintained properly can produce carbon monoxide or a bad smell. To assure a good quality of breathing air you can also use systems to remove or to convert the carbon monoxide. The maximum concentration of CO_2 in breath air is allowed to be 10ppm (particles per 1.000.000)

- Regardless to the air compressor type, precautions must be taken to prevent contaminants from entering through the compressor intake. The compressor inlet must be located away from all sources of toxic contaminants including carbon monoxide which is found in engine exhaust and in any form of combustion. No vehicles should be allowed near the compressor intake.

- The precautions described above also apply to portable compressors. In addition, in the case of engine-driven compressors, precautions must be taken to prevent engine exhaust gases from entering the air intake of the compressor. Compressor engine exhaust should be piped to a location safely downwind from the compressor air intake. Compressors may vary in design and operation.

•A fitted air filter like the CPF-20 filter (part No 03550), has to be interconnected and must be maintained regulary, to filter bad smells, oil fog, condensed water, rust from pipes and other contents.

5.2 Air - volume velocity, pressure and hose length

Air pressure	min. 6 bar max. 12 bar
Air volume flow	min. 420 l /min max. 560 l /min – with air conditioner or climate control

The **maximum hose length** between the filter and the control valve can be 40m. If it is necessary to use longer hoses you have to contact the manufacturer to take appropriate measures.
The maximum pressure at the supply hose is 8 bar.

6. Operation

Prior to the operation , the helmet, breathing tube, air supply hose, air entry pots and fittings must be thoroughly inspected and cleaned of all dust and debris. Also inspect the helmet suspension and adjust it if necessary (see section 6.2 - Adjustments)

The following steps have to be done before setting into operation:

(1) Operation	- Start the compressor - Open the service valve to pressurize the air supply line
2) Check air pressure	- Pressure must be set with the respirator connected
3) Check safety	- Check all safety, and breathing equipment used in conjunction with the respirator, as recommended by the manufacturer.
(4) Check air supply hose	- Check air supply hoses and connections for - tightness and - leaks
(5) Put the respirator on	- Put the respirator on (keep it as upright as possible to prevent abrasive from falling inside.) - Position the knit cuff on the inner collar so that it fits comfortably. The collar assists in the prevention of dust entering the helmet. Do not allow

	shirt collars or other matter to interfere with the fit the cuff provides around the user's neck. - Pull the cape down to fully extend it, and connect the straps on each side under the arms. - Put the belt and control valve on over the cape, Buckle the belt around the waist and tighten it using the adjusting slide.

7. Adjustments

7.1 Control valve

(Part No: 100074)

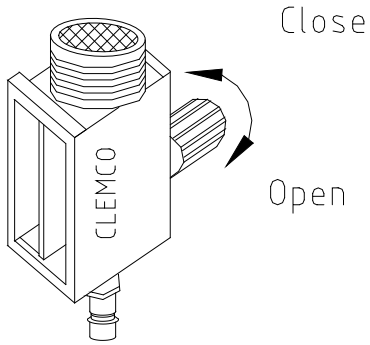

Picture 1a) air control valve

Clemco's air control valve allows the user to increase or decrease the volume of breathing air while wearing the supplied air respirator. To regulate it he has to turn the button on the side.

If connected properly to the air supply the valve allows a regulation of breathing air in a range of 150l/min to 400l/min

7.2 Adjustment and replacement of the helmet suspension

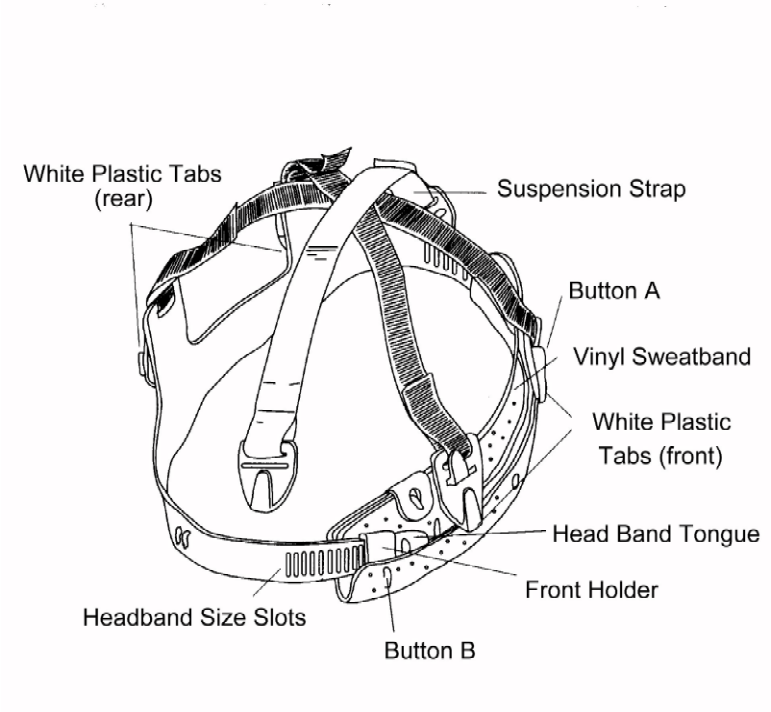

Figure 2 Suspension assembly

The following steps have to be done before setting it into operation:

(1) Remove the Cape	- Open the velcro fastening - Push the cape end until the recess - Pull on end out and push it out of the cape holder until it is removed completely (see section 8.4)
(2) Remove the Suspension assembly	- Remove the suspension assembly by extracting the four white plastic tabs from the wedge-shaped holders in the inner shell.
(3) Unfasten the vinyl sweatband	- Unfasten the vinyl sweatband from the two lower outside bottoms (A and B in figure 2)
(4) Suspension adjustment	- The suspension fits head sizes 6.5 to 8. (Head sizes are marked on the headband slots) - Slide the headband tongue through the front holder until the desired head size is reached. - Adjust evenly on both sides. - Press selected slots firmly onto the lugs on the front band.
(5) Fasten vinyl sweatband	- Fasten the vinyl sweatband onto the buttons of the suspension (bottoms A + B in figure 2)

(6) Check the suspension strap	- Check that the suspension strap is in place.
(7) Readjust the suspension strap	- Try suspension on for fit and readjust if necessary.
(8) Reinstall suspension	- Reinstall suspension into the helmet by inserting the four white plastic tabs into their wedge-shaped holders on the inner shell. The tabs must fully sit in their respective holders. (see (2))
(9) Reattach cape	- Reverse order than (1)

The suspension maintains a fixed distance between the head and the helmet. The suspension must be properly installed and adjusted to provide the protection and comfort for which the helmet is designed.

8. Maintenance program and replacement parts

The helmet, the hoses, air entry pots and fittings should be checked for dust or debris every day, and should be cleaned before using.
Periodically inspect and clean the foam filter and screen in the alternate air control valve.
After using the helmet it should be stored in a clean and dry area by hanging the respirator by the handle.

8.1 Replacing inner lenses

(1) Open Frame	- Trough rubber latch.
(2) Remove Inner Lens	- Remove the middle lens and cover lens. - Pull the lens gasket and inner lens off the window opening flange. - Remove the inner lens from the lens gasket.
(3) Place new lens	- Clean gasket and replace a new inner lens. - Place the new gasket together with the lens onto the opening from outside. - Place the gasket together with the inner lens onto the flange, and fix one recess over the belonging plug. (see figure 3) - Repeat the above process for all recesses around the helmet.
(4) Place perforated cover lens and one middle lens and close the frame	- Cover lenses - 3 perforated middle lens.

8.2 Replacing perforated cover lenses

Up to three cover lenses may be installed at one time. For maximum visibility we recommend to install only so many lenses to last during a work period.

Preparing lenses in the following manner will permit lenses to be pulled off easily by a user wearing heavy gloves:

(1) Place the middle lens on a clean flat surface. Place up to three cover lenses on top of it.
(2) Bend the straps of the two upper lenses to the top and the strap of the bottom lens down. (see figure 2)
(3) Open the visor frame and remove the cover lens respective the remaining rest of the perforated mylar lenses.
(4) Place the mylar lenses together with the cover lens on the inner lens so that the straps of the mylar lenses come through the visor frame.
(5) Hold the lenses and close the visor frame.

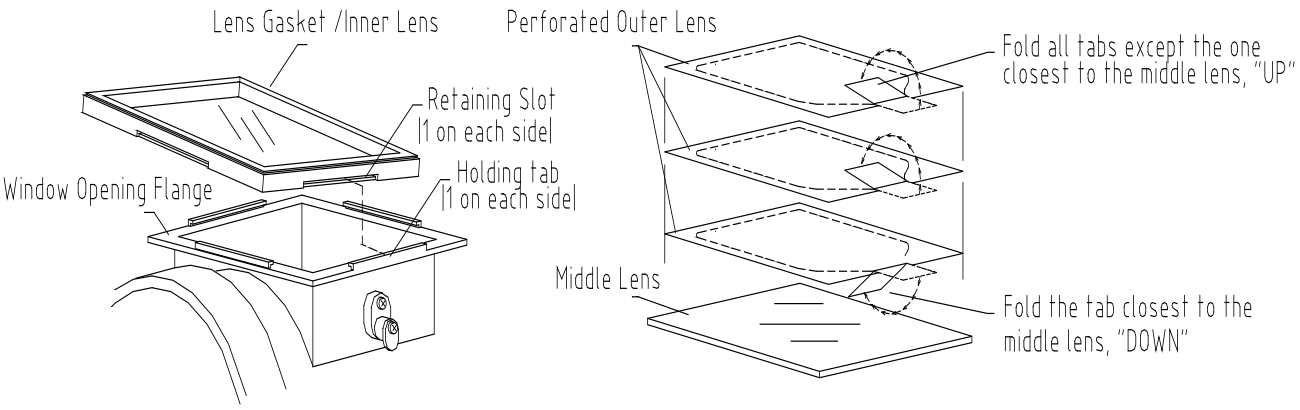

Figure 3: Replacement of mylar lenses

8.3 Suspension

To replace the suspension or adjust suspension, see section 7.2. (and figure 2)

8.4 Outer cape

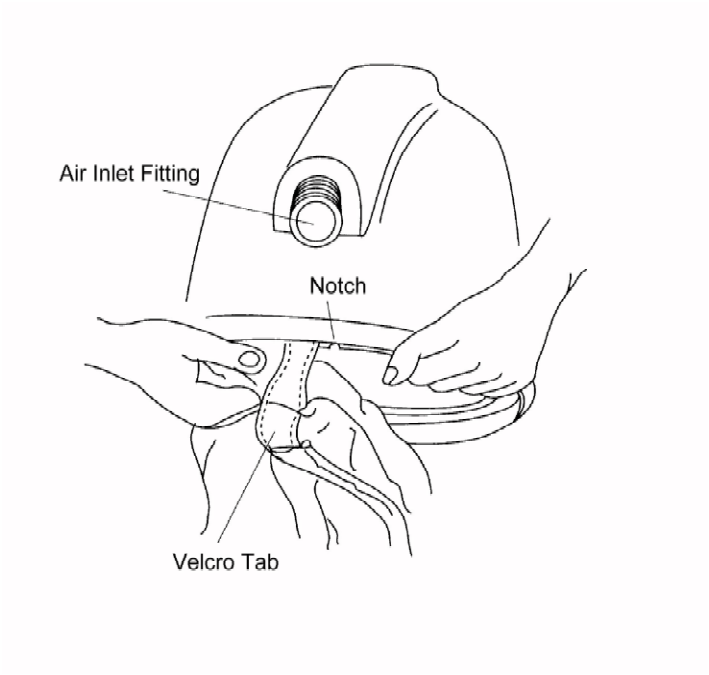

Figure 4: Detachment of cape

When the cape becomes soiled or requires replacement, it can easily be removed as follows.

(1) Open the Velcro tabs on the cape	See Figure 4
(2) Detach cape	- Slide the ends of the cape to the notch. - Continue sliding one end of the cape out of the groove until the entire cape is detached from the helmet.
(3) Install cape	- To install the cape, separate the Velcro tabs on the cape and slide one end into the groove on the bottom edge of the cape attachment strap, at that point where the groove is notched. - Continue sliding the cape around the bottom of the helmet until the entire cape is completely into the groove. **NOTE!** Spraying a non-toxic silicone-base lubricant into the groove will reduce friction and ease assembly.
(4) lose the Velcro tabs	See Figure 4

8.5 Replacement of collar

The inner collar plays an important roll in controlling air escape from the helmet and preventing ingress of dust. To replace or wash the collar it has to be detached from the cape (see point 9 for service maintenance and cleaning).
The cape must be replaced when the collar is stretched to the point where it no longer fits snug around the neck.

8.6 Replacement of lens frame

The lens frame must be replaced if a sealing is not ensured anymore or if the rubber latch doesn´t stay closed. When changing the lens frame the silencing in the inner part of the helmet should be changed, too.

8.7 Replacement of chin strap

The chin strap must be replaced at the first sign of wear.

8.8 Replacement of air hose

The screws at the helmet and the control valve are secured against unintentional untying with a double sided adhesive.

9. Service maintenance and cleaning

Follow washing instructions described in this section. Do not use any caustic chemicals or solvents that may be irritating or harmful to the user, or which change the properties of the materials used in any part of the respirator.

9.1. Filter

The Filter (foam) is in the air contra / valve. Replace the foam filter at the first sign of soiling.
Therefore you have to remove the spring ring with a small screwjack and take off the filter with the dirty foam. After that reassamble this 3 parts in opposite order.

9.2. Outer cape

The cape can be machine washed using warm water and mild detergent. Dry in a clothes dryer at the lowest temperature setting. Do not dry clean. See section 8.4 for removal and installation instructions.

9.3 Collar

For removing transpiration and dust the collar should be washed daily. Remove the collar from the cape and wash it in warm water and mild detergent. Dry in a clothes dryer at the lowest temperature setting. Do not dry clean.
See section 7.2 for removal and installation instructions.

9.4 Sweatband / Suspension

The sweatband, suspension, and suspension strap should be washed using warm water and mild detergent. See section 7.2 for removing suspension.

9.5 Helmet assembly

The helmet assembly should be cleaned with disinfectant. You can use the product „Indicur“ from the Company „Henkel“.*
*** WARNING!** This product was only tested for agreeableness with our helmet. When using this product you have to follow the instructions in the manual . For eventually occurring indigestibility with the skin or other health damages we do not take any liability.

9.6 Inner lens

Inner and middle lenses should be replaced when pitted or scratched. However mild detergent and water can be used to clean them. Volatile solutions such as alcohol, gasoline or ammonia must be not used to clean these lenses. Allow the lens to air dry; cloth and towels can scratch the lens surface.

10 Storage

10.1 Daily storage

When the respirator is not in use, it must be stored in a clean, dry area. Hang the respirator by the handle.

10.2 Long duration storage

After cleaning and thorough drying, the cape should be tucked inside the helmet. The respirator should then be placed in a plastic bag and the bag sealed to keep out dust and moisture.

11. Spare parts

11.1 Air Control Valve

Air Control Valve (Art. No. 100074)

Pos.	Part.No.	Model	Description
(-)	04381		Filter set (foam-filter, screen an springring)
(-)	100042		Air Control valve; complete
(19)	100074		Air Control valve; without belt

11.2 Helmet

Pos.	Art.No.	Model	Description
(-)	90373D	Safety system A-100	c/w Apollo 100, 25 tear away lens, blast suit size 52, gloves, CPFD-20 with 20m breathing hose
(-)	21045D	APOLLO 100	Apollo-100 helmet assy c/w ACV and cape
(-)	21046D	APOLLO 100/AC	Apollo 100 with AC c/w AC and cape
(-)	21047D	APOLLO 100/CC	Apollo 100 with CC c/w CCT and cape
(-)	90296D	APOLLO 100	Apollo 100 green c/w ACV with leather cape
(1)	90295D		Screw visor A 100
(2)	90041D		Nut for Apollo 100
(3)	20976D		Window frame
(3A)	90291D		Outer gasket
(4)	21042I	25 pieces	Mylar lens
(5)	21043I		Middle lens (plastic)
	90290D		Glass window (179x129x3mm)
(6)	21044I		Inner lens (polycarbonate)
(7)	99996D		Inner gasket
(8)	08892I		Head suspension
(9)	04460I		Chin strap assy
(9A)	90266D		Holder for chin strap
(9B)	90267D		Screw chin strap
(10)	04430I		Belt
(11)	90331D		Nylon cape Apollo 50 + 100
(11)	100557		Leather cape A-50/60/100 kompl. leather
(12)	90268D		Acetatfolie A-100

(13)	94260D		Inner neck cuff
(14)	90270D		Silencer
(15)	04370I		Gasket (6pcs) for union
(16)	01030D		Hose union 3/4“ NPTF plastic
(17)	90084D	9 mm	Clamp for air supply hose
(18)	90130D	9 mm x 0,75 m	Air supply hose complete
(19)	100074		Breathing valve less belt
(19)	100042		Break valve
(20)	04410I		Air conditioner AC
(20)	04411I		Clima control
(21)	10534I		Cape holder für Apollo
(22)	20975D		Outer helmet shell (green)
(23)	100065		Rubber latch for window frame
(25)	90733D		Latch for A 100 big
(26)	90783D		Holder for latch big
(26A)	90784D		Screw holder for rubber latch
(26B)	90294D		Screw A-100
	90339D		Screen window A-100
	100586		Hood (Polypropylen)
	100380		Ear safety pair
	100723		Hearing protections
	24233D		A-100 rubber hood
	23801D		Cape strap

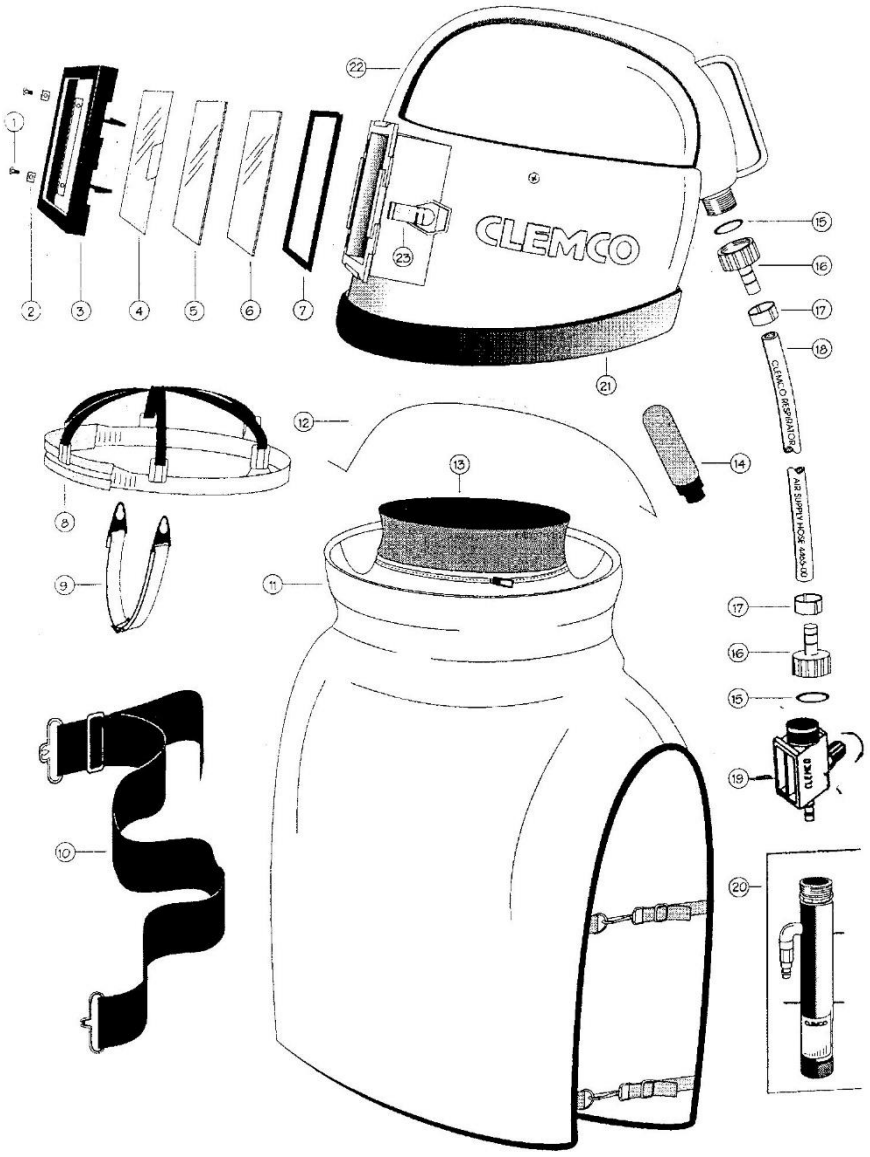

Figure 6: Helmet single components